Diamond Frames™

False Ceiling & Partition Systems

Faster Installation

Easy Maintenance

Quick Lock System

Easy to Detach

DF SUPER FINE

Modular Ceiling Systems Catalogue

Email: info@diamondframes.in I **Website:** www.diamondframes.in

Modular Ceiling Systems

Modular ceiling systems are versatile and flexible ceiling solutions that consist of modular components that can be easily installed, adjusted, or replaced. These systems offer numerous benefits in terms of aesthetics, functionality, and ease of installation compared to traditional ceiling construction methods. It shall be suspended to the soffit by a 4mm diameter adjustable quick fit hanger rod system. Main Tee shall be in 32mm/33mm height exposed portion (polyester coated) shall be 24mm. Cross T shall be 26mm height and expose portion is 24mm.All systems components are made of roll formed hot dipped galvanized steel of 0.30mm thickness with zinc coating of not less than 120g/m2 and a minimum tensile strength of 240mpa. Wall angle are 24mm height x 24mm expose portion made of 0.40mm thick pre coated coil. Both ends of the Main T have integral splices which can be enjoyed firmly be inserting a tab on the one end of one section into slot in the adjoining section. The exposed flange finish shall be pre painted polyester coated galvanized steel not less that 0.30 in off-white colour which coating thickness of 20 microns top and 8 microns primer alkyd backer on backside.

Modular Ceiling Framing Layout

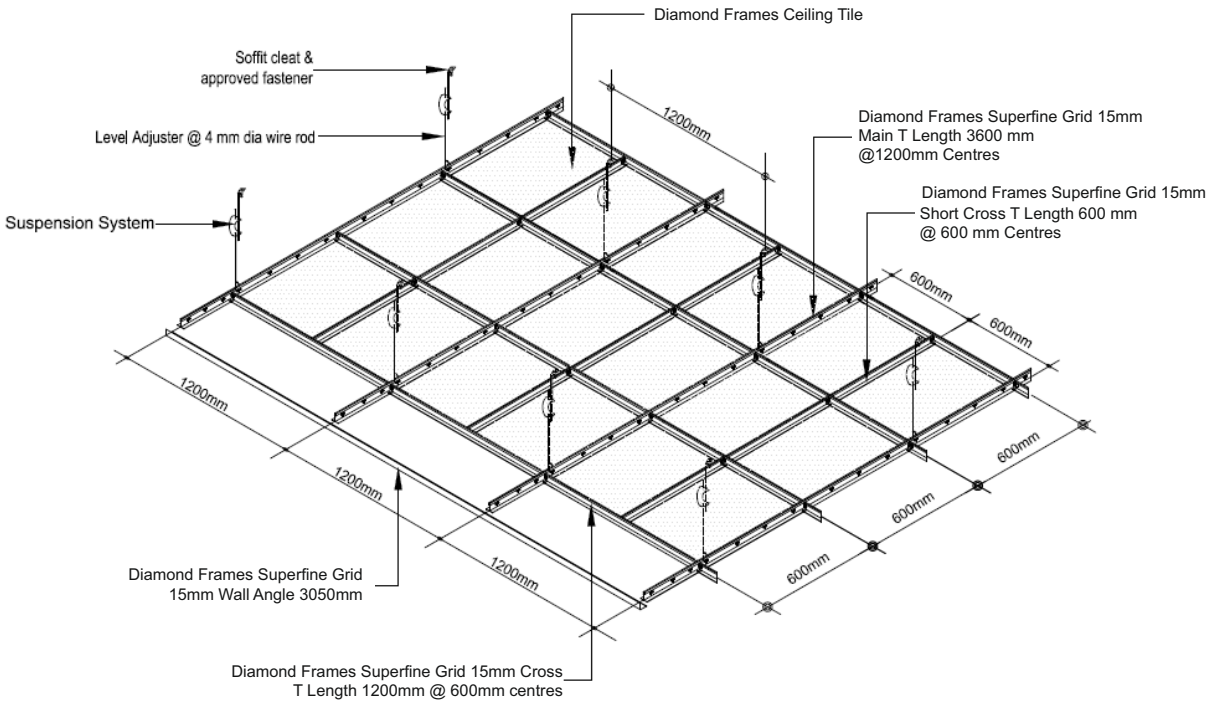

Advantages & benefits of Modular Ceiling Systems

VERSATILITY

Modular ceiling systems come in various designs, patterns, and finishes, allowing for customization to suit different architectural styles and design preferences. They can be used in commercial buildings, offices, educational institutions, healthcare facilities, retail spaces, and more.

EASY INSTALLATION

The modular nature of these systems makes them quick and easy to install. The components are pre-fabricated and designed to fit together seamlessly, reducing installation time and labor costs. This is particularly beneficial in projects with tight timelines.

ACCESSIBILITY

Modular ceiling systems can incorporate features such as access panels, allowing easy access to above-ceiling infrastructure, such as electrical wiring, HVAC systems, and plumbing. This simplifies maintenance and repairs, minimizing disruptions to the space below.

ACOUSTIC PERFORMANCE

Many modular ceiling systems are designed to improve acoustic performance by reducing noise transmission. They can incorporate sound-absorbing materials or incorporate acoustic baffles, panels, or tiles to create a more comfortable and productive environment.

SUSTAINABILITY

Modular ceiling systems often utilize sustainable materials, such as recycled content or low-VOC (volatile organic compounds) options. They can also contribute to improved energy efficiency by integrating lighting fixtures and accommodating HVAC systems for better airflow and temperature control.

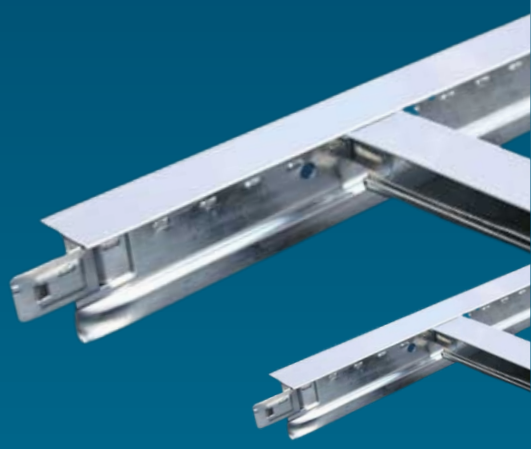

Specialities for T Grid System

Steel material is processes by pre painted hot-dip galvanized steel. Zinc Mass Coating is 120gm / m2 Salt spray test or the white Pre-painted cap is for 300 Hours.

The Material is processed with 20micron polyster pre-painted. The anti-rusty process has been incorporated into the galvanized steel.

T-bars are produced by fully automatic machine controlling the production of straight material to maximum 0.1mm tolerance ensuring consistent dimensioning of the grid module after installation.

Load bearing capacity when the span is 1.2 meter supported with hanger wire from roof for type 1 is 8.45kg / m2 and type II is 12.05kg /m2

The modular grid system involves breaking the layout into modular units or modules that can be rearranged and combined to create different layouts. It provides flexibility and scalability in design.

Products Application Areas

IT Sector

Banking Sector

Factory & Industries

Government Projects

Commercial Malls

Hotel Industry

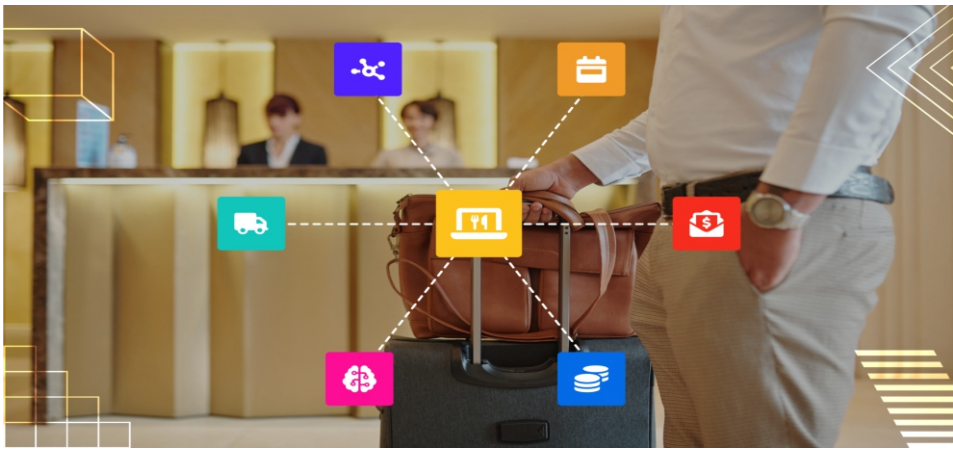

Educational Institutions

Healthcare Projects

Modular Ceiling Systems

Modular Ceiling Installation Process

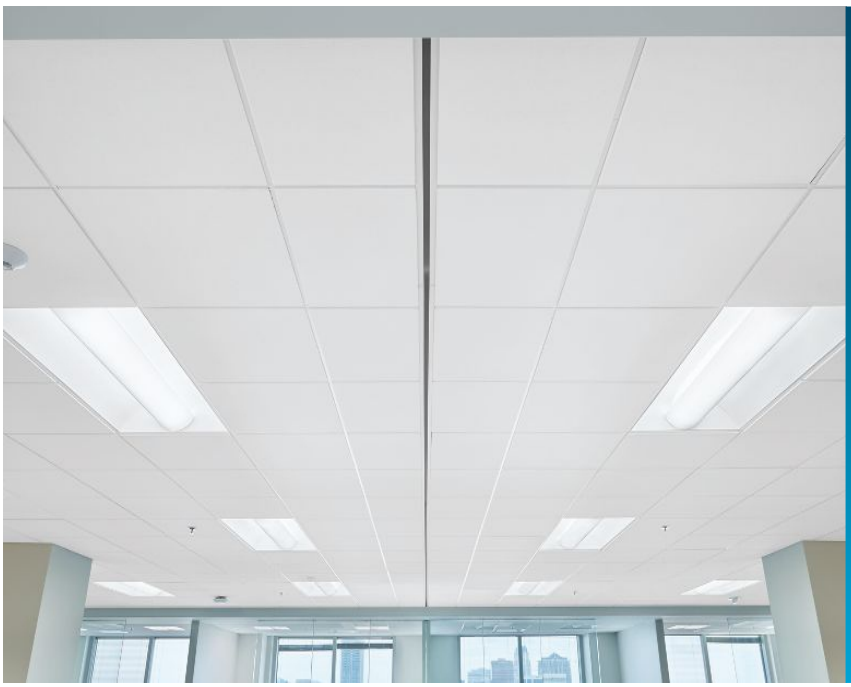

Required Tools

GI Wire Cutter
Measurement Tape
Sprit Level Chalk Line
Screwdriver
Drilling Machine

Preliminary Work : Clear the area below where you'll be working, and cover furniture and floors with drop cloths or plastic sheets to protect them from dust and debris.

Measure and mark: Use a Measurement Tape to determine the dimensions of the ceiling and plan the layout of the grid system. Mark the locations where the grid system will be installed on the walls, ensuring the lines are level and straight.

Install the Wall Angles: Attach the metal wall angles to the walls using Screws. The Wall Angles should be aligned with the marked lines and securely fastened.

Install the main runners: Cut the metal Main Tee to fit the length of the room, and install them perpendicular to the wall angles at regular intervals. Use hanger wires to suspend the main runners from the true ceiling, ensuring they are level and evenly spaced.

Install Cross Tees: Cut the Cross Tees to the desired length and insert them into the slots on the main runners, forming a grid pattern. Ensure the Cross Tees are securely locked into place.

GI Wire Support: Providing 4mm dia GI Wire with necessary length, A couple of GI Wire both ends make a hook by using Cutting Player, Butter Fly Clip using for adjusting height of Grid Ceiling level.

Support Fixing: At the true ceiling make a mark of Grid Fastener position, and make a drill at the true ceiling or RCC Slab by using Hammering Machine with the help of hammering bit. GI Wire with butterfly Clip supporting setup, interlocking with Grid Fastener GI Frame.

Install the Ceiling Tiles: Place the ceiling tiles into the grid openings, making sure they fit snugly. If needed, trim the tiles to fit using a utility knife.
Adjusting & Leveling: Make sure Grid Framing should be in proper line and level.

Finish the installation: Install any additional accessories, such as lighting fixtures or air vents, according to the manufacturer's instructions. Make sure all the components are securely fastened.

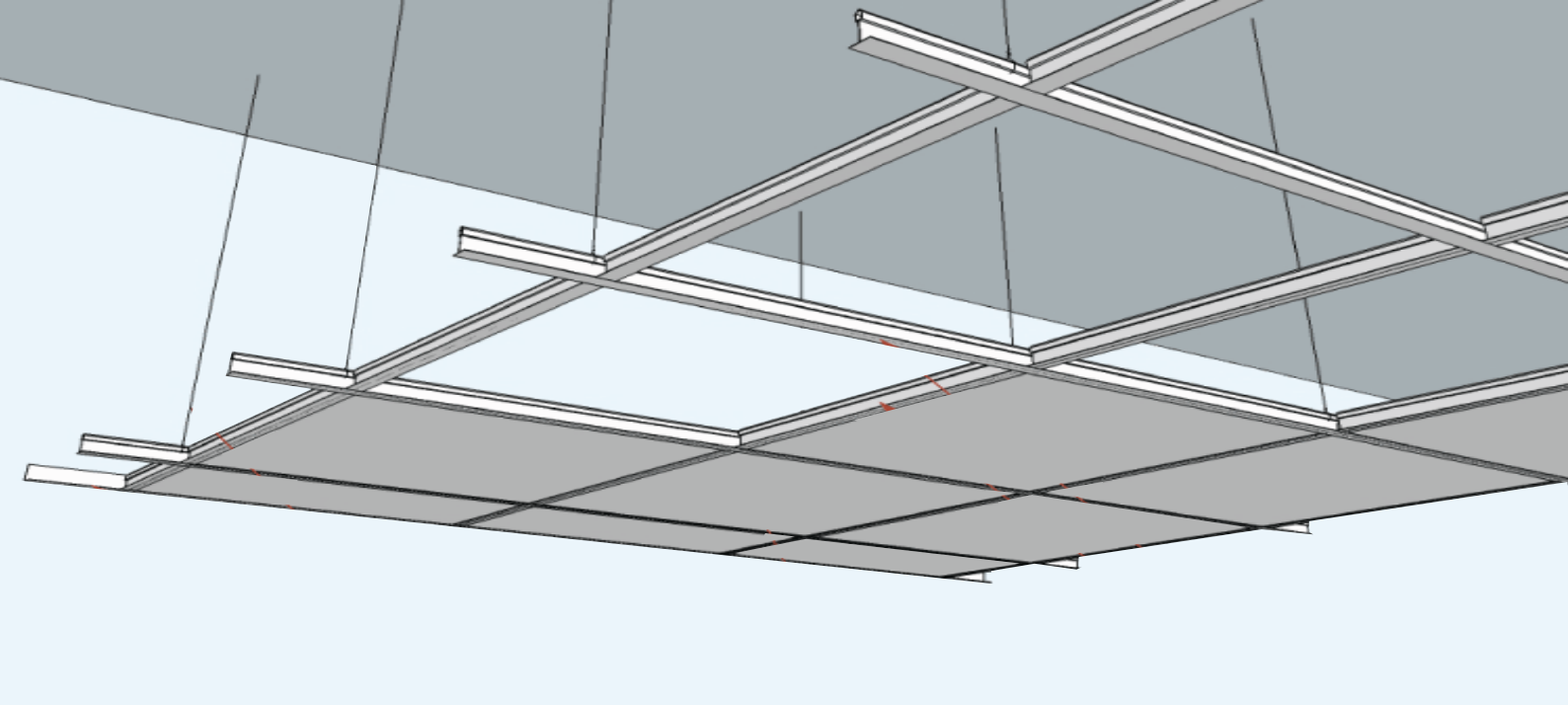

Modular Ceiling Installation Layout

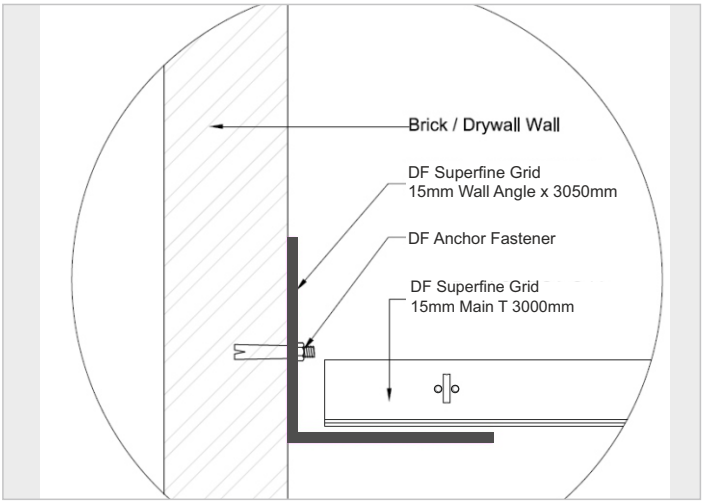

Wall Angle Fixing

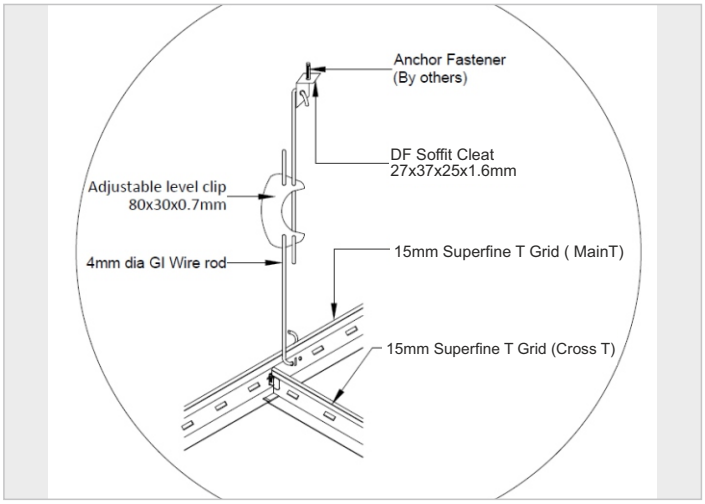

Butterfly Clip for adjustment level

Jointing Tretment

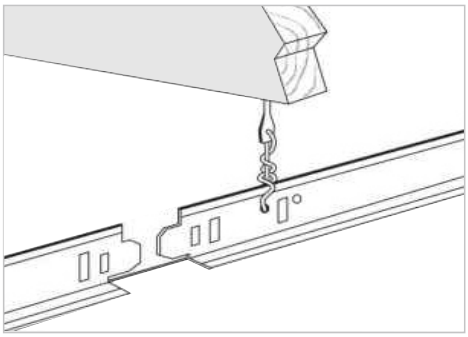

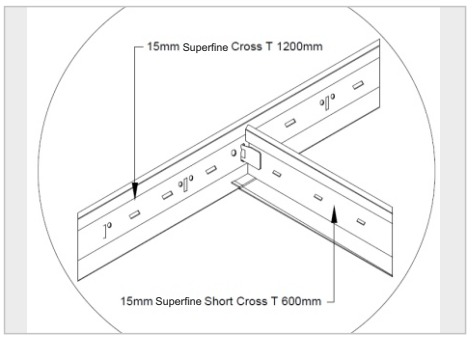

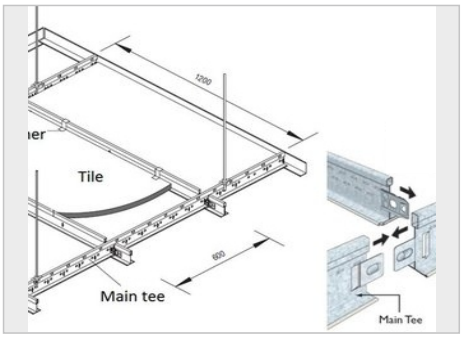

Point to be noted

Please note that the specific installation process may vary depending on the manufacturer's instructions and the type of grid ceiling system you are using. It's important to refer to the manufacturer's guidelines and consult with a professional if you are unsure about any step of the installation process.


Permissible Load for Modular Ceiling

The permissible load on a grid ceiling can vary depending on the specific type and design of the ceiling system. It's important to consult the manufacturer's guidelines and specifications for accurate information regarding load capacities. However, here are some general considerations:

Ceiling Grid Type: Grid ceilings consist of a framework of metal channels that support ceiling tiles. The load capacity can vary depending on the type of grid system used, such as exposed tee, concealed tee, or bolt-slot systems.

Grid Material and Design: The material and design of the ceiling grid also play a role in determining its load capacity. Heavy-duty or commercial-grade grid systems are generally designed to support higher loads compared to standard or residential-grade systems.

Ceiling Tile Weight: The weight of the ceiling tiles being used should be taken into account when considering the load on the grid system. Heavier tiles will exert more downward force on the grid.

Additional Loads: Consideration should be given to any additional loads that may be placed on the grid, such as lighting fixtures, air diffusers, or other suspended components. These additional loads should be within the load capacity of the grid system.

Safety Factors: It's essential to follow safety guidelines and consider safety factors when determining the permissible load on a grid ceiling. Structural integrity and load-bearing capacity should be assessed by professionals to ensure the ceiling can safely support the intended loads.

To determine the precise permissible load on a grid ceiling for a specific project, it is recommended to consult the manufacturer's documentation or consult with a structural engineer or a professional experienced in ceiling installations. They can provide accurate information and ensure the load is within the safe limits of the ceiling system.

Notes

- Frame work has to be made as per Diamond Frames Specification.
- Quality Rawl Plug to be used for fixing Ceiling Angle to wall with the help of self drilling metal screw.
- Every junction of Intermediate Channel & Ceiling Section, connecting clip must be used.

Our Presence

All India Networks

Head Office

DIAMOND FRAMES PVT LTD

(An ISO 9001 - 2015 Certified Company)

Regd. Office : # 4, Corporation Shopping Complex, Project - II, Brewery Road, Shenoy Nagar, Chennai - 600030, Tamil Nadu, INDIA. Contact No : 044 - 42307490, 26216699

Branch Offices

MOVING TO THE NEXT LEVEL
IN PURSUIT OF EXCELLENCE